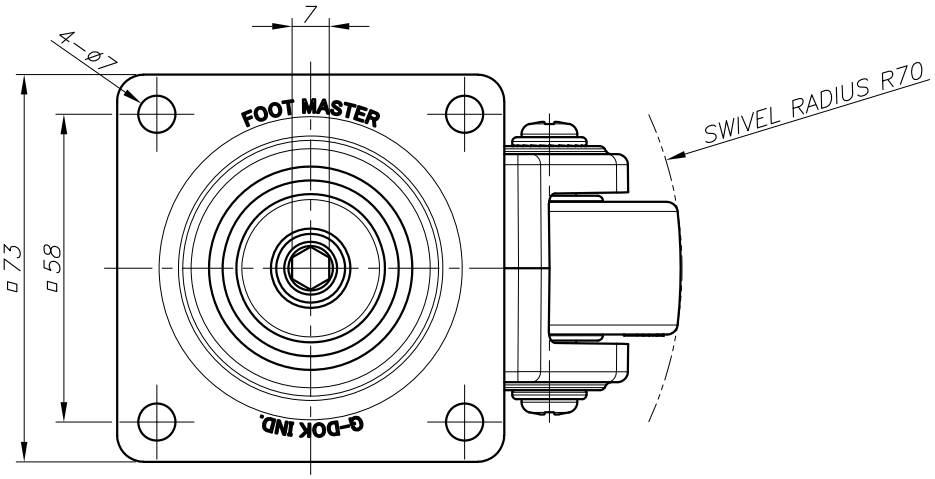

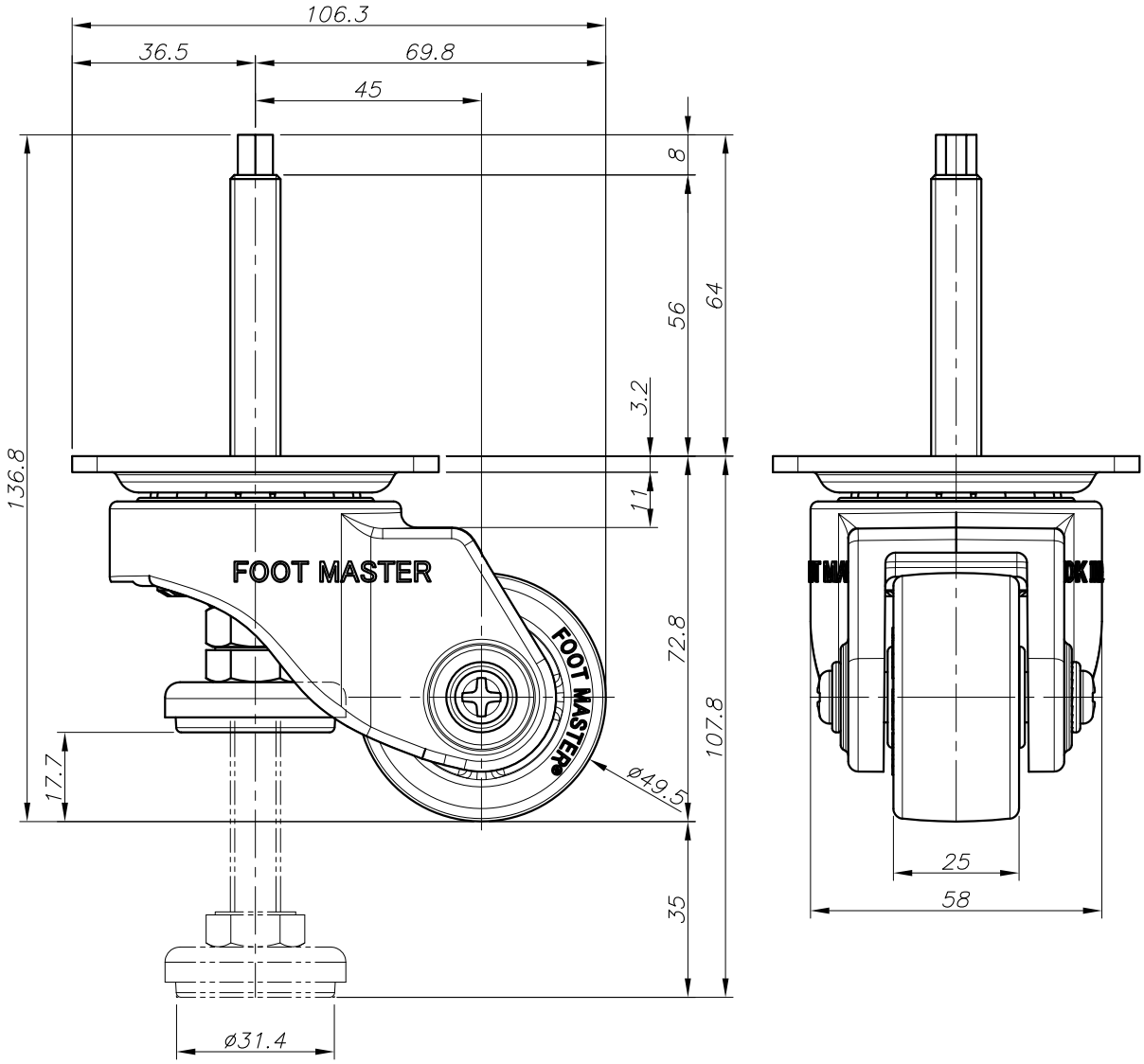

FOOT MASTER®	FOOMA®	G-DOK IND.	MODEL NAME	GDH-50-ASF